ASSEMBLY INSTRUCTION
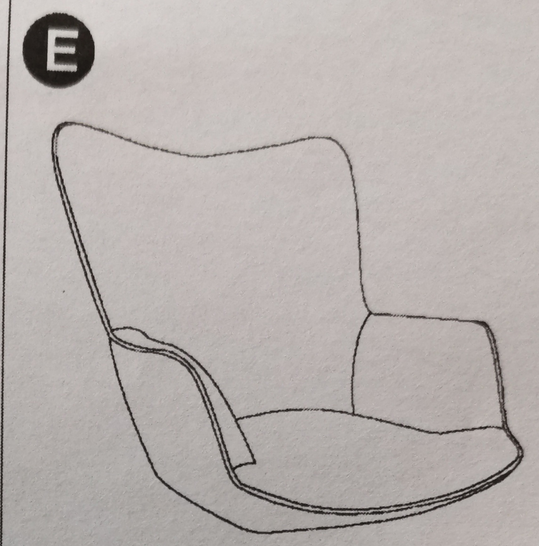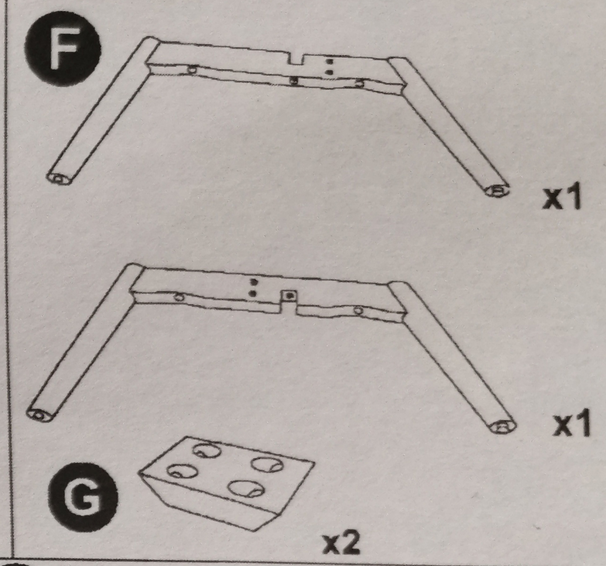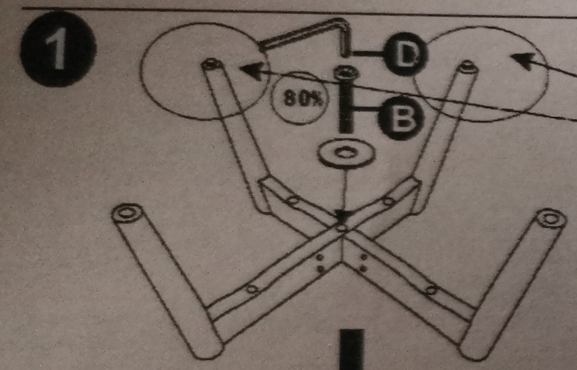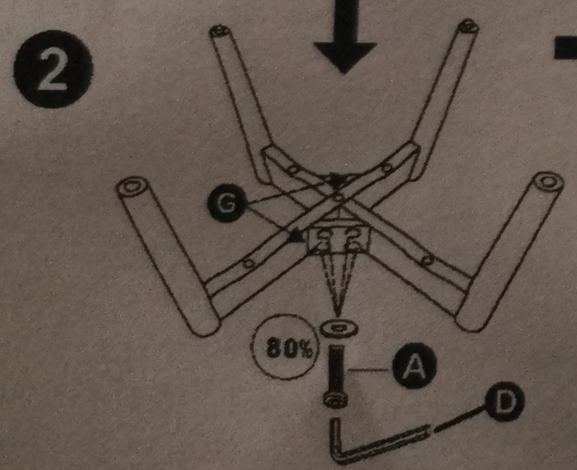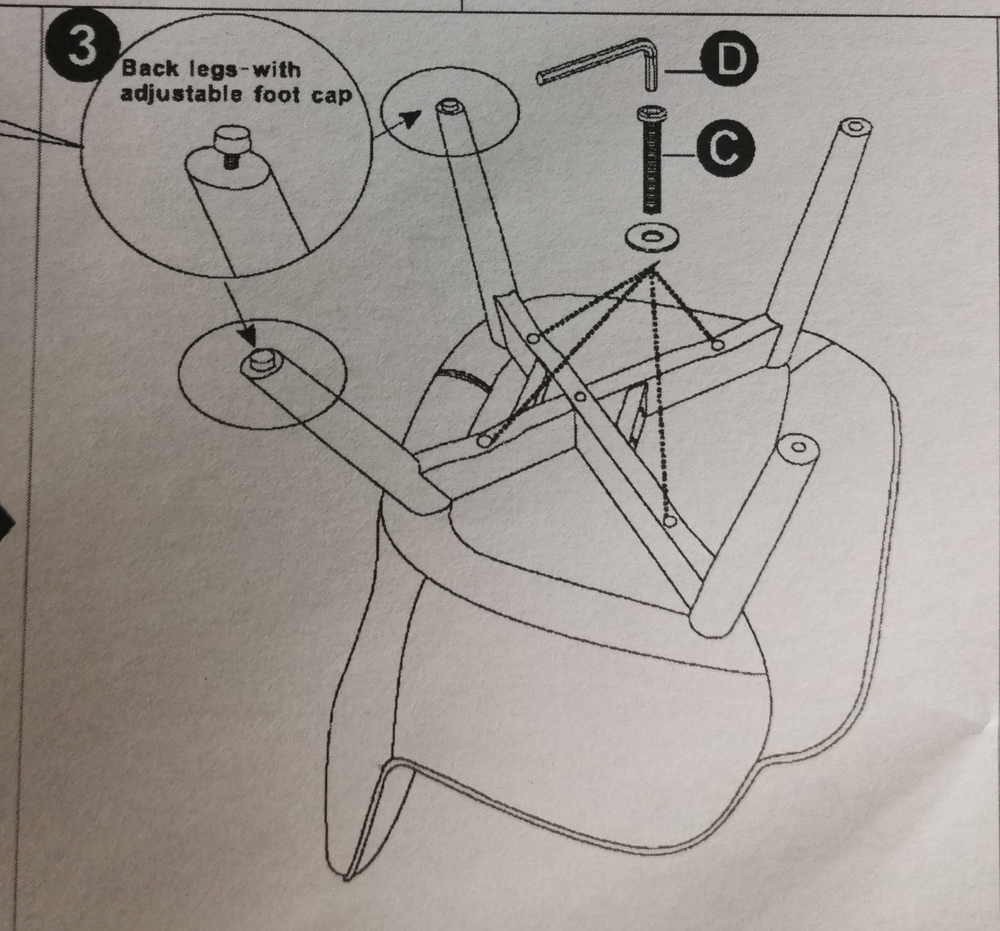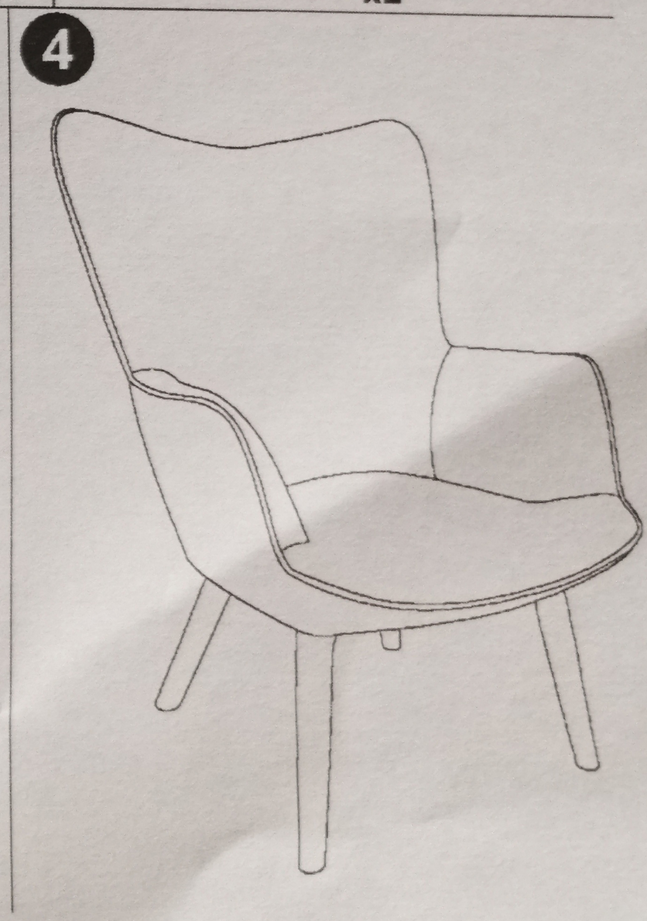
A		M6x25mm	8pcs
B		M6x48mm	1pcs
C		M6x65mm	4pcs
D		4mm	1pc